REVISION HISTORY	REV.	DATE	REVISOR	CHANGE
	A	10/04/11	PEH	UPDATED PRINT STYLE

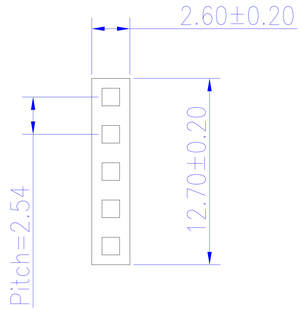

HOUSING

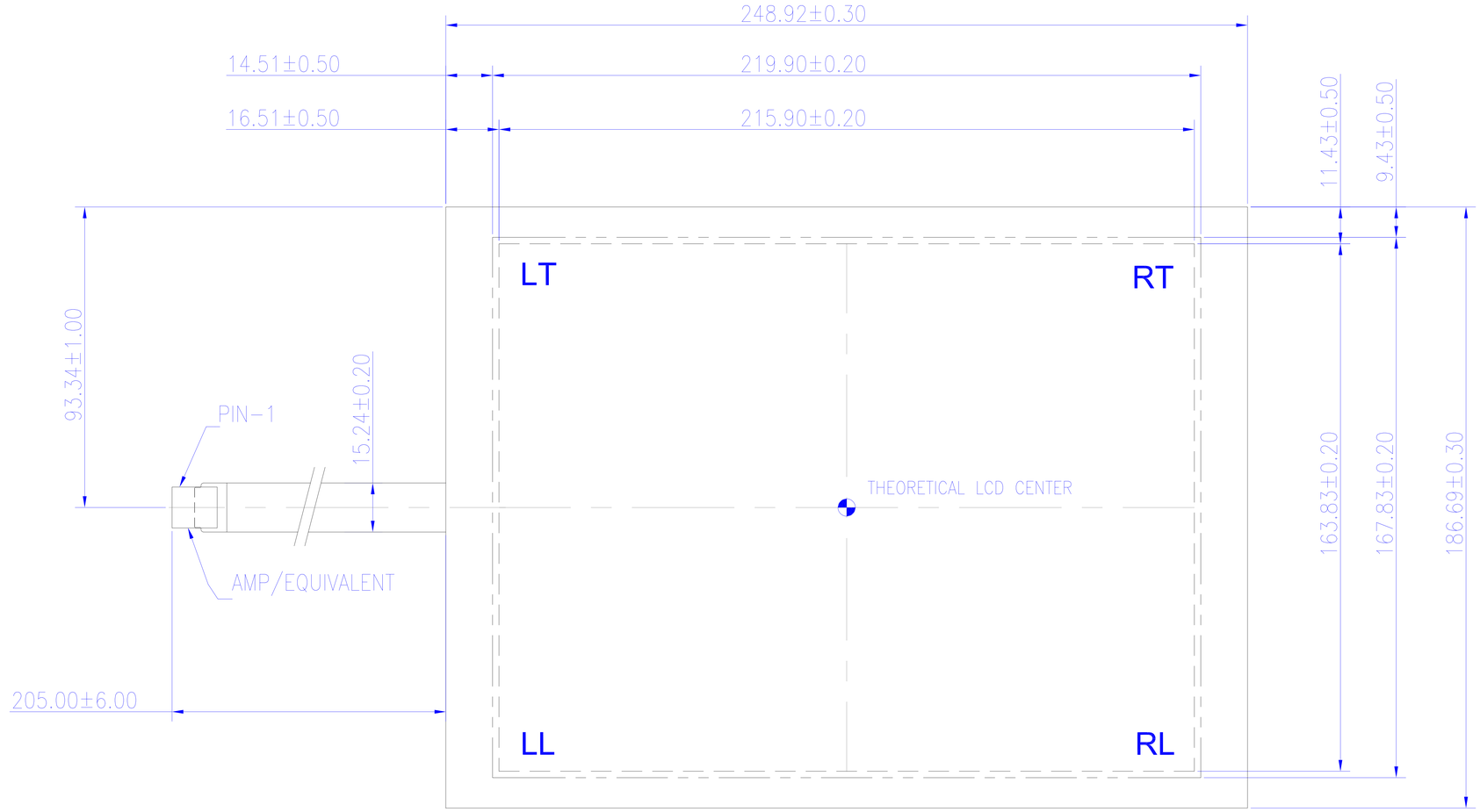

CONNECTOR PINOUT	
PIN NO.	DESIGNATION
1	RT
2	RL
3	SG
4	LT
5	LL

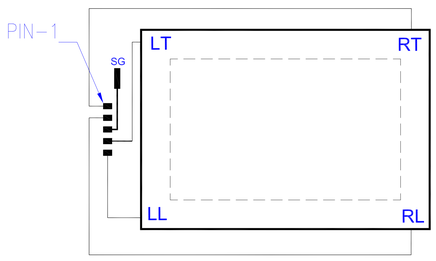

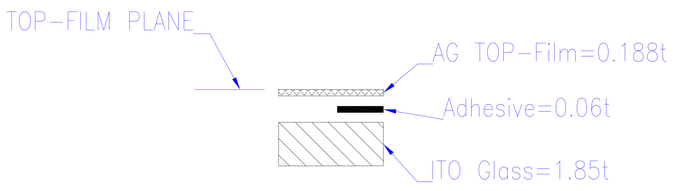

DETAIL A

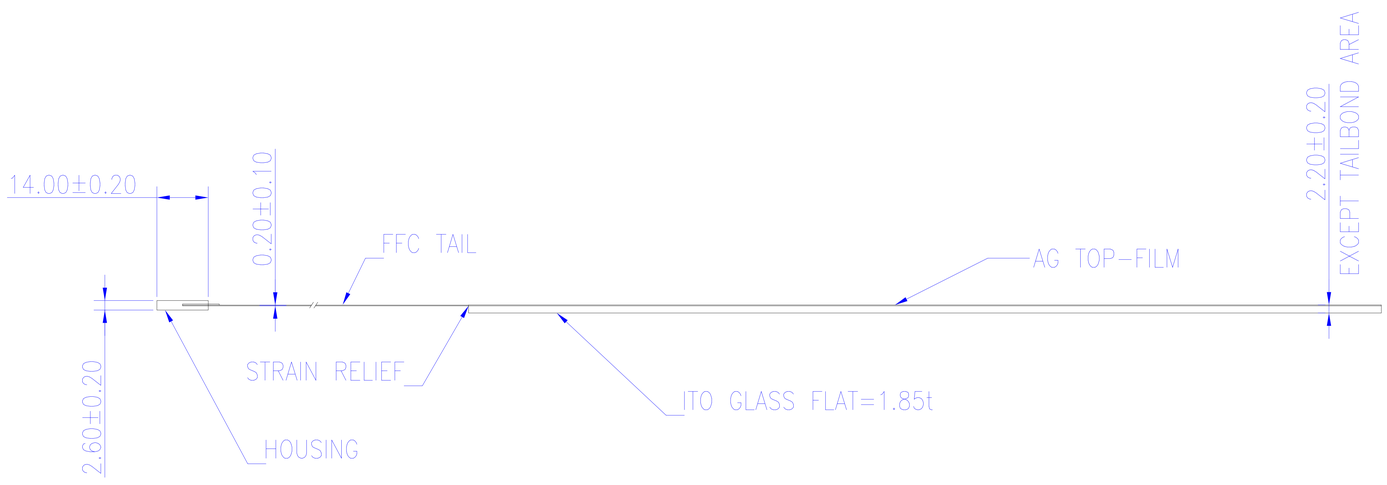

THE BERGQUIST COMPANY
CANNON FALLS, MN 55009

TOLERANCE	AS SPEC'D	DRAWN	PEH	DATE	10/04/11	PART DESCRIPTION	10.4" DIAGONAL 5-WIRE TOUCHSCREEN	
SCALE AS "A"	2/5 X	CHECKED	PBC	DATE	10/12/11			
SHT. SIZE: C+	UNITS: mm	APPROVED		DATE		PART NO.	400401	Rev. – / Version A