REVISION HISTORY	REV.	DATE	REVISOR	CHANGE
	–	–	–	–

CONNECTOR PINOUT:

PIN 1: REAR SIDE ITO FOR EMI SHIELDING
PIN 2 - 7: BLANK
PIN 8 - 19: SENSE X1 - X12
PIN 20 - 28: SENSE Y1 - Y9
PIN 29 - 30: BLANK

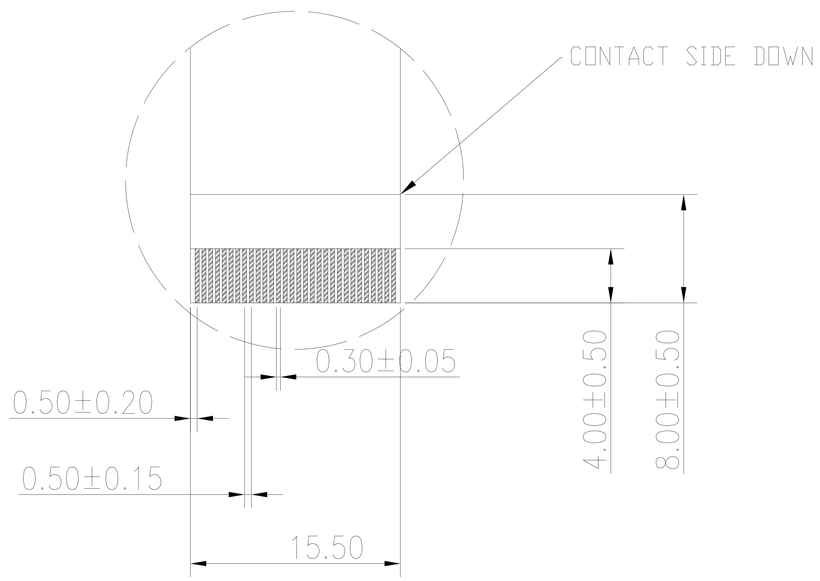

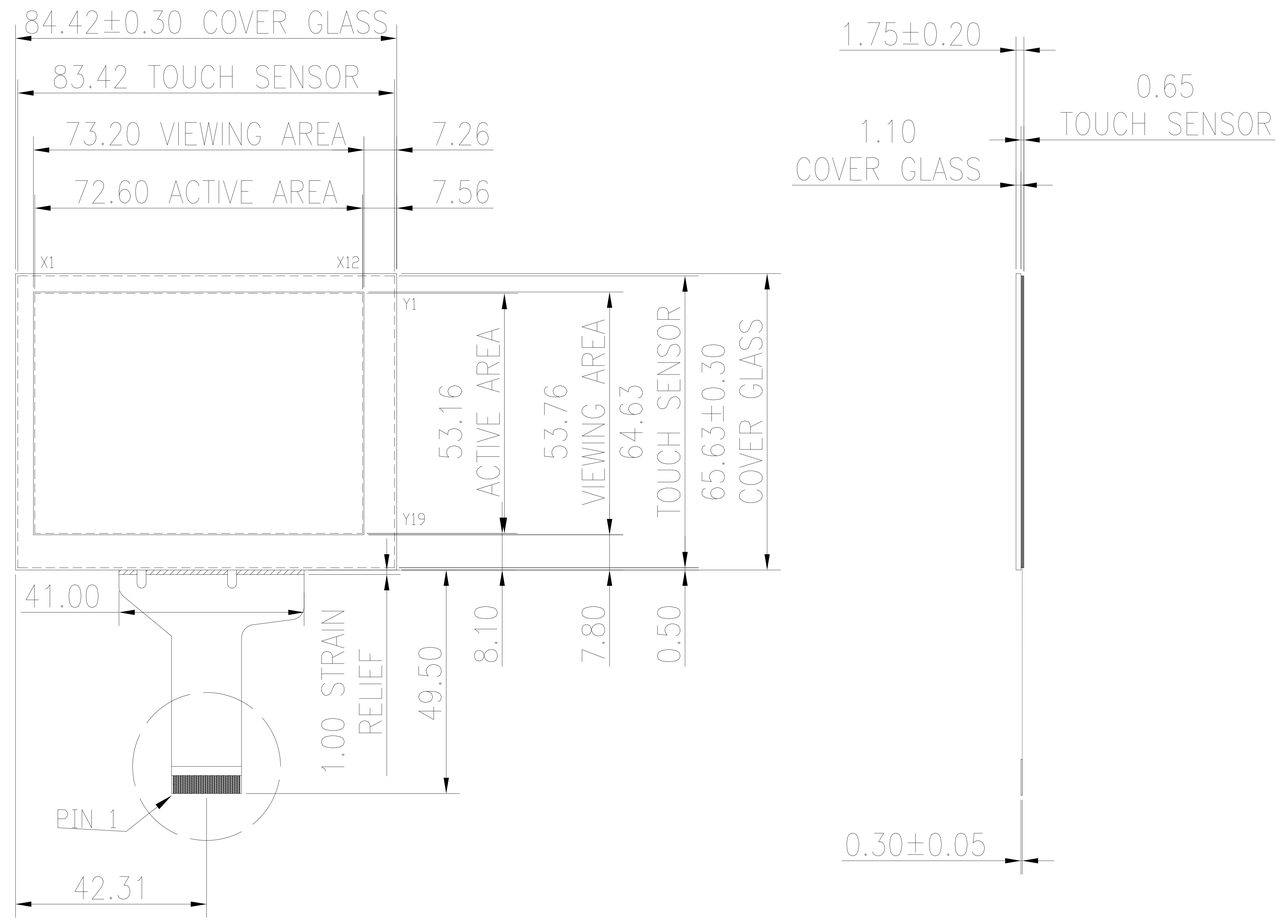

NOTES:

1. INPUT MODE: PROJECTED CAPACITIVE
2. OVERALL THICKNESS : 1.75±0.20MM
3. FRONT SURFACE : CLEAR
4. TAIL TYPE : GOLD PLATED FPC, ZIF

THE BERGQUIST COMPANY
CANNON FALLS, MN 55009

TOLERANCE	±0.50MM	DRAWN	PEH	DATE	04/29/11	PART DESCRIPTION	3.5" PROJECTIVE CAPACITIVE TOUCH SCREEN
SCALE AS "A"	1/2 X	CHECKED	PBC	DATE	10/14/11		
SHT. SIZE: C	UNITS: mm	APPROVED		DATE		PART NO.	400551 — Rev. — Version